LL1019 BRASS BALL VALVE

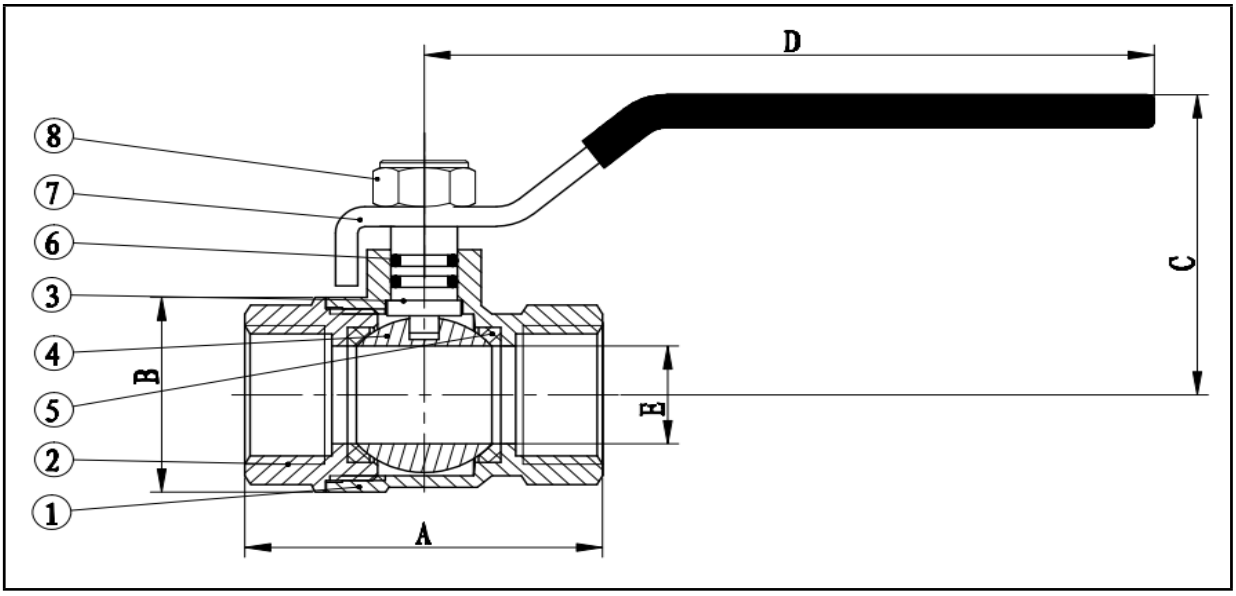

NO	Parts	Material
1	Body	Brass
2	Bonnet	Brass
3	Stem	Brass
4	Ball Seat	PTFE
5	Ball	Brass
6	O rings	NBR
7	Handle	Steel
8	Nut	Stainless Steel 304#

Brass Ball Valve, full flow, flat lever handle

- Suitable for water services, heating and air-conditioning plants, compressed air systems.
- minimum and maximum working temperature: -10°C, 120°C.
- Threads : ISO228 (equivalent to DIN259 and BS2779)
- Opening / Closing tests : 20,000 times

Dimension:mms	1/4”	3/8”	1/2”	3/4”	1”	1.1/4”	1.1/2”	2”	2.1/2”	3”	4”
A	40	41	48.4	56	65	76	85	99	132	152	178
B	23	23	29.5	35	42.7	53	63	79	102.5	120.5	144.5
C	39.2	39.8	54.2	57.6	60.6	75.8	81.3	88.5	121.5	129.5	141
D	87	87	95	95	126	140	140	165	224	224	283.5
E	9	10	14.8	19	24	30.2	37	47	62	74	90
PN	25	25	25	25	25	25	25	25	25	25	25