LL1161 BRASS BALL VALVE

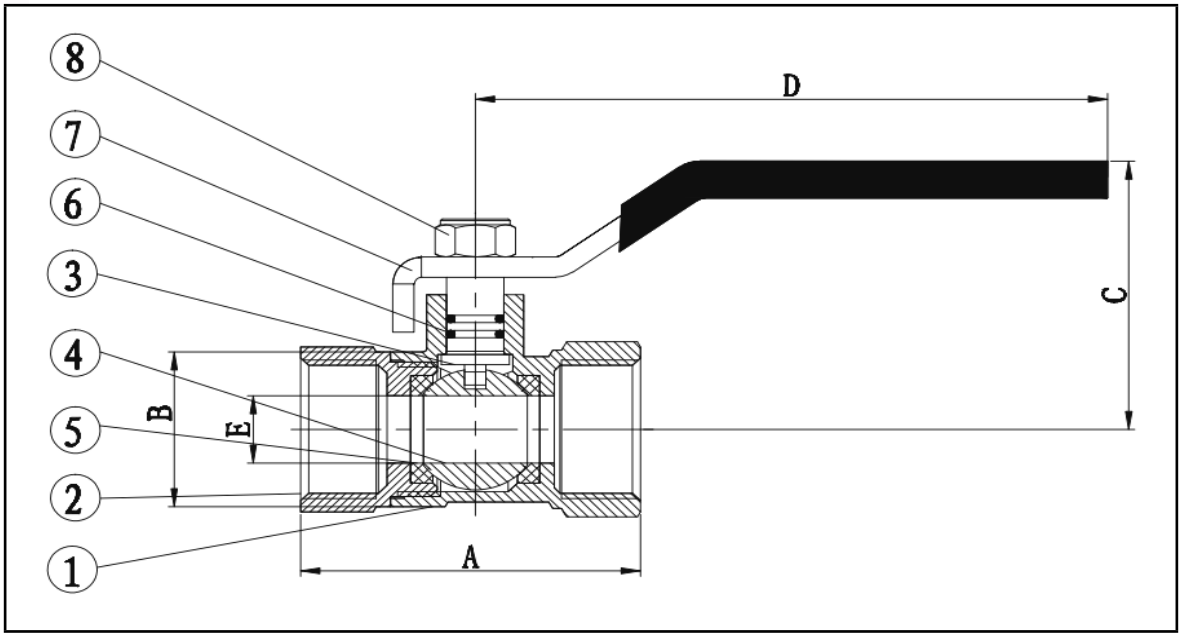

NO	Parts	Material
1	Body	Brass
2	Bonnet	Brass
3	Stem	Brass
4	Ball Seat	PTFE
5	Ball	Brass
6	O rings	NBR
7	Handle	Steel
8	Nut	Stainless Steel 304#

Brass Ball Valve - nickle plated, reduced flow, flat lever handle

- Suitable for water services, heating and air-conditioning plants, compressed air systems.
- minimum and maximum working temperature: -10°C, 120°C.
- Threads : ISO228 (equivalent to DIN259 and BS2779)
- Opening / Closing tests : 20,000 times

Dimension:mms	1/2”	3/4”	1”	1.1/4”	1.1/2”	2”	2.1/2”	3”	4”
A	47.3	50	61	67	79	87	125	141.5	163.5
B	23	29.5	35	42.7	53	63	96	123	135
C	38	52.5	57	62.5	72.5	76.5	111	123	135
D	87	95	95	126	140	140	224	224	224
E	10	14.8	19	24	30.2	37	57	68	84
PN	16	16	16	16	16	16	16	16	16